BENDIX/KING

KFM 985

Airborne FM Transciever

Specifications

Parameter	KFM 985	Download VHF Module	VHF Module	UHF Module	Downband UHF Module
Frequency Range		136-160 MHz	148-174 MHz	450-512 MHz	403-457 MHz
Output Power - watts		5	5	4	4
Stability - PPM		± 5	± 5	± 5	± 5
Channel Spacing - kHz		12.5/15, 25/4	12.5/15, 25/30	25	25
Channel Increment - kHz		5 or 12.5 kHz	5 or 12.5 kHz	12.5 / 25 kHz	12.5 / 25 kHz
Modulation		15K0F2D 16K0F3E 16K0FXE	15K0F2D 16K0F3E 16K0FXE	15K0F2D 16K0F3E 16K0FXE	15K0F2D 16K0F3E 16K0FXE
Rcvr. Selectivity - dB		72	72	70	70
Rcvr. Sensitivity - 12dB Sinad - µV		.25	.25	.30	.30
Channels	Up to 210				
Current Draw (@ 12vdc nom)	1.5 amps max (Xmit) 1 amp max (Rcv)				
Lighting	14 vdc				

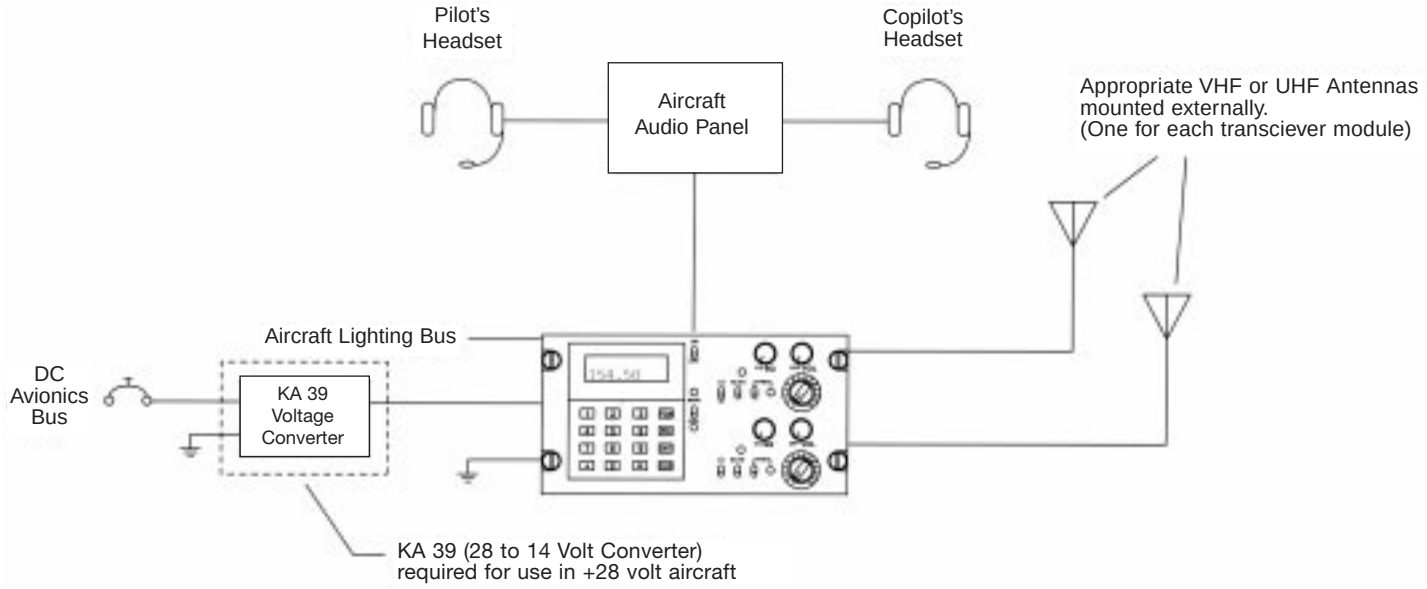

Typical System Configuration

BENDIX/KING

BK Radio, Inc.
7505 Technology Drive,
West Melbourne, FL 32904
(407) 984-1414 • 800-648-0947
Fax (407) 984-0434
www.relm-comm.com

FCC Type Acceptance

K95 LT50001 Parts: 22, 74, 80, 90
K95 LT50001 Parts: 22, 74, 80, 90
K95 LT50001 Parts: 22, 74, 80, 90
K95 LT50001 Parts: 22, 74, 80, 90
K95 LT50001 Parts: 22, 74, 80, 90
K95 LT50001 Parts: 22, 74, 80, 90
K95 LT50001 Parts: 22, 74, 80, 90
K95 LT50001 Parts: 22, 74, 80, 90
K95 LT50001 Parts: 22, 74, 80, 90

Note: Specifications subject to change.